Fuel Pressure Regulator 14 x 60

Pressure range: 1,4 ... 5 bar/3,2 ... 6 bar

Mechanical data	
Supply	10 mm, O-ring
Reflow	8 mm, tube connector
Reflow quantity	min. 15 l/h, max. 220 l/h

Order numbers	
1,4 ... 5 bar	B 280 500 701
3,2 ... 6 bar	B 280 500 581
Offer drawing	A 280 500 581
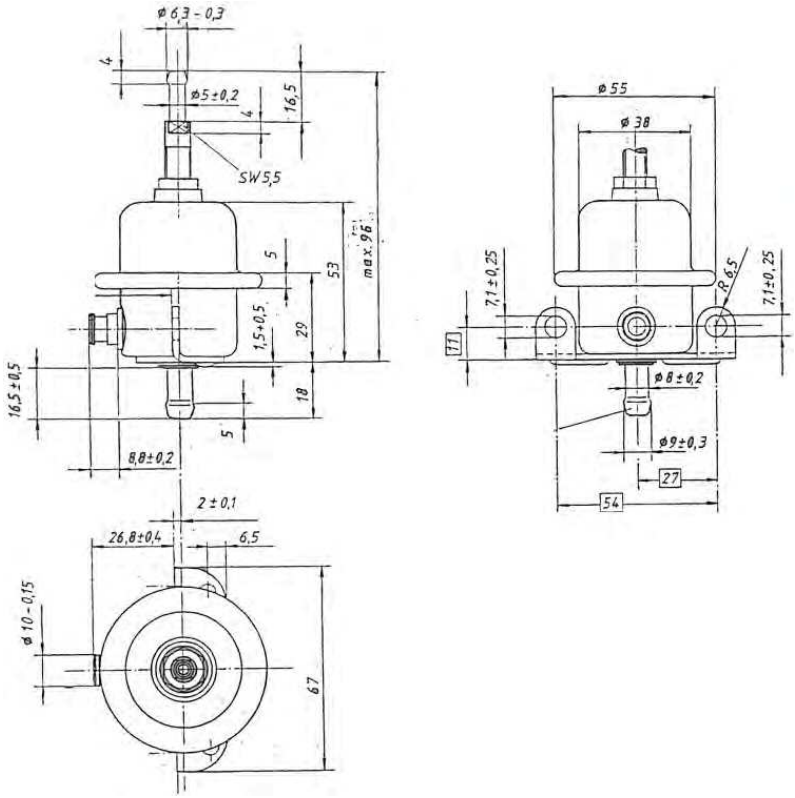
Description
Sheet steel housing with manifold connection