Fuel Pressure Regulator 05-40 A

Pressure range: 0,5 ... 4 bar

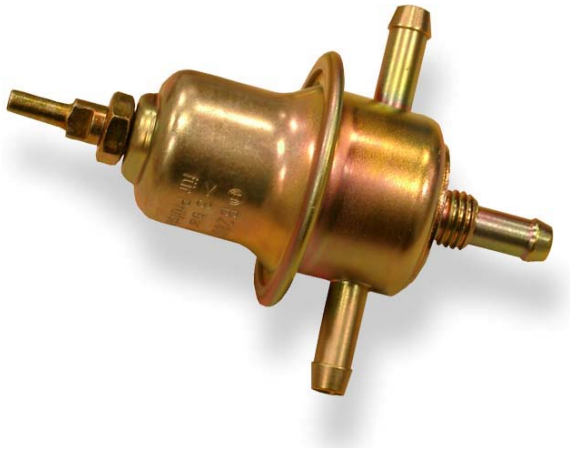

Mechanical data	
Supply	8 mm, tube connector
Reflow	8 mm, tube connector
Reflow quantity	min. 15 l/h, max. 220 l/h

Part number	
	B 280 500 139
Offer drawing	**A 280 500 104**
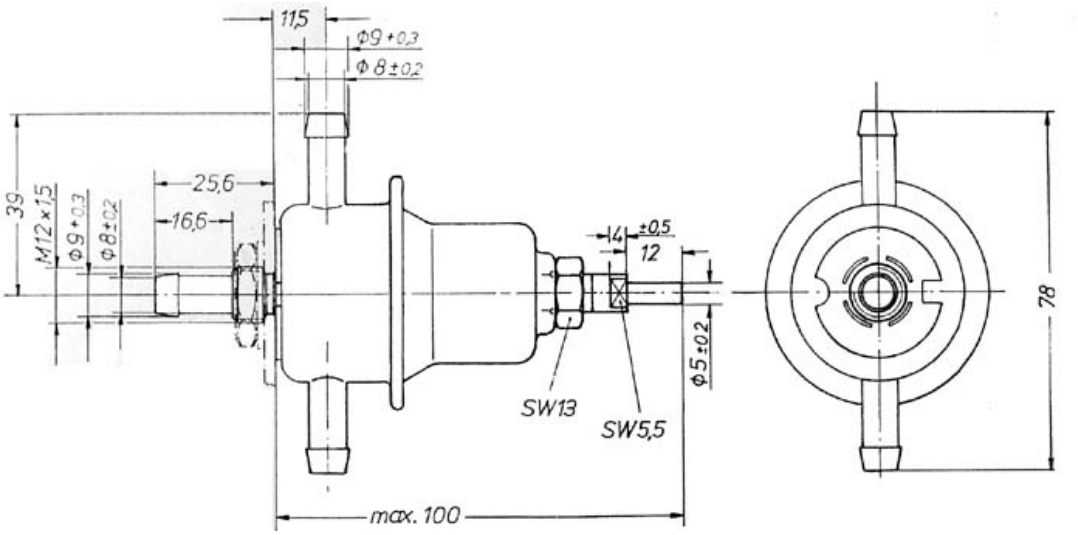
Description
Sheet steel housing with manifold connection